PRODUCT PROFILE

FSTX Robin 34 is a medium-power FM frequency shifter designed to shift video transmitter (VTX) frequencies **from 5645–5945 MHz down to 3200–3800 MHz**, with a maximum output power of **33 dBm (2 W)**. Paired with FSRX Finch 34 and compatible video receivers, it provides a reliable video link for FPV drones and other remote devices.

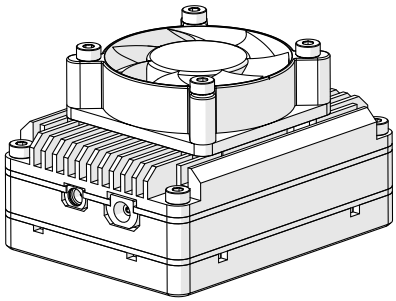

FEATURES

- Ability to operate with digital signals at identical frequencies
- Fast frequency switching (< 100ms) for the FFSH support
- Effective LOS operational range up to 35 km with compatible FSRX+VRX and recommended antennas
- Support of both standard communication protocols - TBS, SmartAudio, and IRC Tramp
- Any additional software features such as custom communication protocol or FHSS algorithms can be added upon request

APPLICATION

- FPV drones (fixed wing and multirotor)
- UGV
- Repeaters
- Video surveillance systems

RECOMMENDED ITEMS

- FSRX Finch 34 (including FSRX Finch 34 v.2)
- Directional Horn 3.2-4.2 GHz 14 dB (RHCP)

SPECIFICATIONS

Parameter	Unit	Value
Input frequency range	MHz	5645÷5945
Output frequency range • working • full	MHz	 3200÷3800 3000÷4000
Channels	64	
Output power	dBm	20÷33
Input impedance	Ohm	50
Output impedance	Ohm	50
Frequency adjustment step	MHz	1
Power adjustment step	dBm	1
Power levels	16 (att. step), 4 (SmartAudio)	
Control protocol	UART (SmartAudio/IRC Tramp) USB CDC (SimpleCLI)	
Supply voltage	V_{DC}	7.5 ÷ 30
Max. power consumption	W	15
Connector type	MMCX	
Working case temperature	C°	< 75
Cooling	active (cooling fan)	
Weight	g	< 51

FREQUENCY RESPONSE

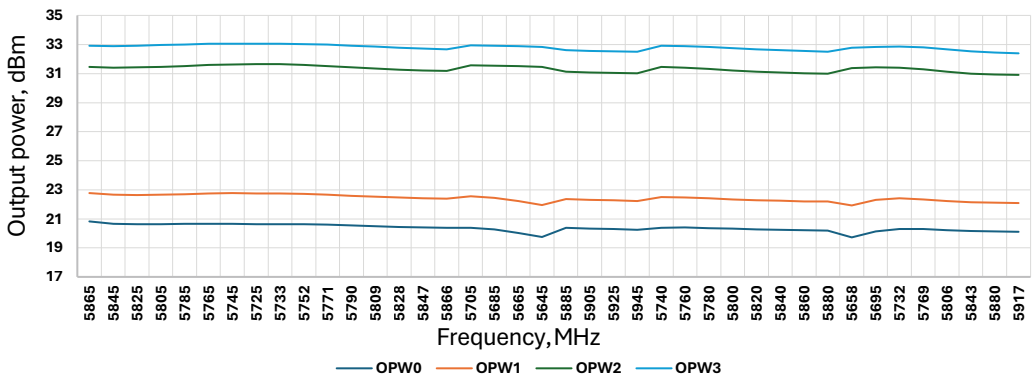

FREQUENCY TABLES

VRX frequency table								
	1	2	3	4	5	6	7	8
A	5865	5845	5825	5805	5785	5765	5745	5725
B	5733	5752	5771	5790	5809	5828	5847	5866
E	5705	5685	5665	**5645**	5885	5905	5925	**5945**
I(F)	5740	5760	5780	5800	5820	5840	5860	5880
R	5658	5695	5732	5769	5806	5843	5880	5917

FSTX frequency table								
	1	2	3	4	5	6	7	8
A	3335	3355	3375	3395	3415	3435	3455	3475
B	3467	3448	3429	3410	3391	3372	3353	3334
E	3495	3515	3535	**3555**	3315	3295	3275	**3255**
I(F)	3460	3440	3420	3400	3380	3360	3340	3320
R	3542	3505	3468	3431	3394	3357	3320	3283

LO FSTX frequency table								
	1	2	3	4	5	6	7	8
A	4567,5	4577,5	4587,5	4597,5	4607,5	4617,5	4627,5	4637,5
B	4633,5	4624	4614,5	4605	4595,5	4586	4576,5	4567
E	4647,5	4657,5	4667,5	**4677,5**	4557,5	4547,5	4537,5	**4527,5**
I(F)	4630	4620	4610	4600	4590	4580	4570	4560
R	4671	4652,5	4634	4615,5	4597	4578,5	4560	4541,5

POWER TABLE

Levels	1	2	3	4
Power values, dBm	18	26	30	33
Label values, W	150	300	1W	2W

PINOUT

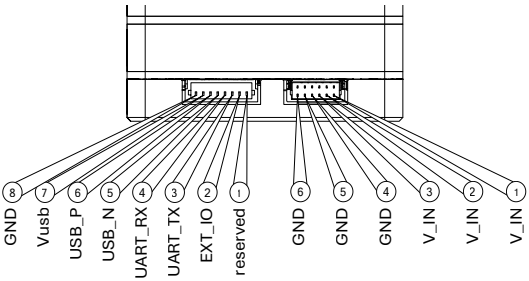

INCLUDED ITEMS

- FSTX Robin 34
- JST F-SH 8pin cable (COMM)
- JST F-SH 6pin cable (PWR)
- MCX-MMCX pigtail (VTX)
- Omnidirectional clover leaf antenna 3.15 – 4.0 GHz (RHCP)
- User manual

FC CONFIGURATION

For FC configuration you can use the following QR codes:

SmartAudio

IRC Tramp

DIMENSIONS

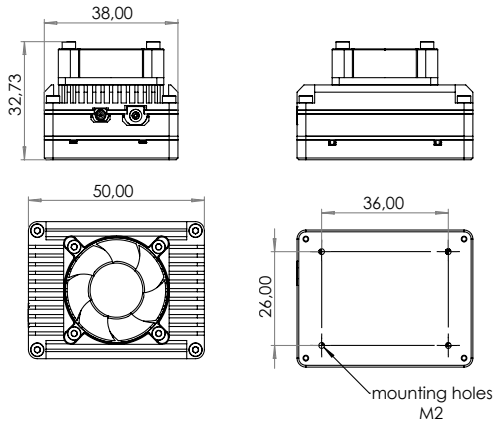

OPERATING CONDITIONS

Temperature: **-20 °C ÷ 55 °C**, 7K7 (IEC 60721-3-7)
Relative humidity: up to 100%
IP: 44 (IEC 60529)
Mechanical execution: 7M1 (IEC 60721-3-7)

WARNING

To prevent transmitter amplifier failure, do not power on the device without a connected antenna or other load.
Any setup/configuration procedures must be performed with the propellers removed.